CUI Devices is now Same Sky! Learn More

Additional Resources: Product Page

© Same Sky 2024. All Rights Reserved.

RE25S

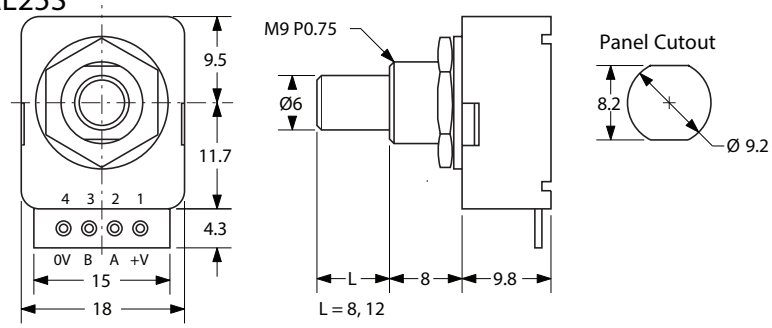

RE25V

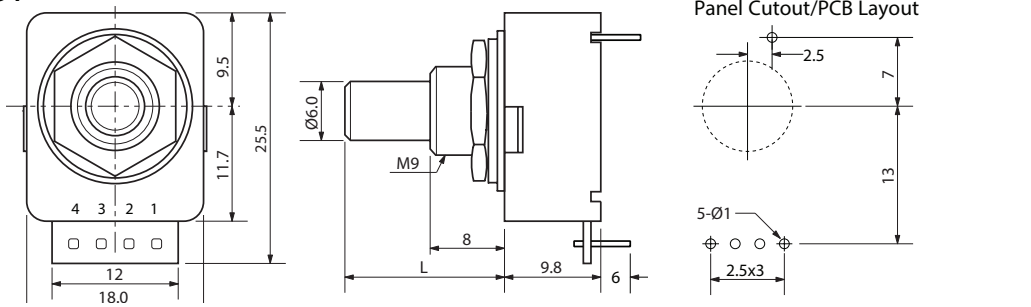

RE25F

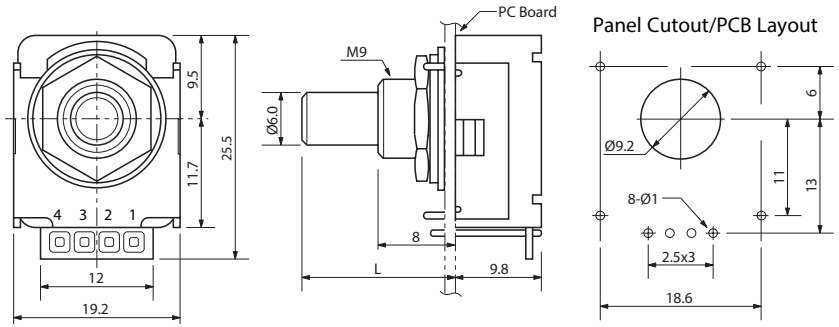

RE25C

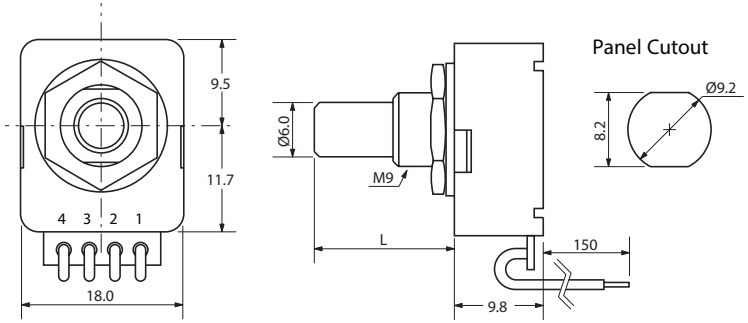

SPECIFICATIONS

ELECTRICAL

1. Input Power: 5.0 VDC ±10% @ 10mA
   3.3 VDC ±10% @ 10mA
2. Output Voltage: H = Vcc- 0.4V
   L 0.4V
3. Resolution: 16, 25 PPR
3. Output Type: TTL/CMOS Compatible
4. Max. Freq. Response: 500 Hz

MECHANICAL

1. Max Shaft Load, radial: 1.0 kgf
   axial: 1.0 kgf
2. Rotational Angle: 360° continuous
3. Click Torque: 100 gf cm max.
4. Rotational Life : 2.5 x 10 ^{6} cycles

ENVIRONMENTAL

1. Operating Temp: 0° to +60° C
2. Storage Temp: -20° to +80° C
3. Humidity: 85% RH, no condensation
4. Vibration: 10~55 Hz, 1.5 mm, 2 hrs
5. Shock: 50G, 6ms , 3 axes , 3 reps

OUTPUT CIRCUIT

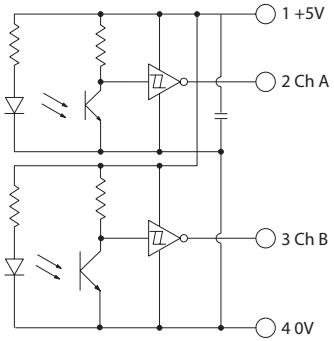

OUTPUT WAVEFORM

Clockwise rotation viewed from front

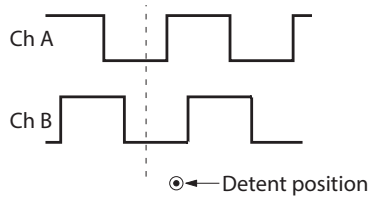

ORDERING INSTRUCTIONS

RE25X X XX C XX R X

Type:
N: Non-dr ip proof

Termination Options:
S: Solder hole
C: Cable Type
V: Vertical mount
F: Front mount

Resolution:
16: 16 PPR
25: 25 PPR

Detent:
C: Detent Only

Shaft Length:
16: 16mm shaft
20: 20mm shaft

R: Round shaft

Input Voltage:
A: 5V±5% input
B: 3.3V input

Same Sky
6405 SW Rosewood St, Suite C
Lake Oswego, OR 97035
www.sameskydevices.com

DRA WN BY	UP DAT E D	CHECKED	UNIT
JRH	09/12/2024	09/03/2020	MM

PART NO. RE25XXXXCXXX

REV . B