Product Change Notice (PCN)

Date: 11/16/2022

PCN Number: 0450007R-01

To Our Customers:
We appreciate your use of our products. Our commitment in maintaining and improving processes is demonstrated by plans to enhance our product quality, reliability, and manufacturability. The purpose of this notice is to inform you of a product change.

Product(s) Affected:
SJ-43504-SMT-TR

Reason(s) for Change: *Manufacturing process improvements. Please see CUI Devices website for updated product drawing*

Description of Change:

1. Minor Housing Differences

PREVIOUS CUI DEVICES DETAIL / IMAGE	NEW CUI DEVICES DETAIL / IMAGE
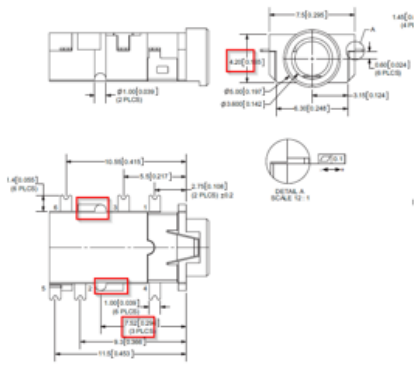	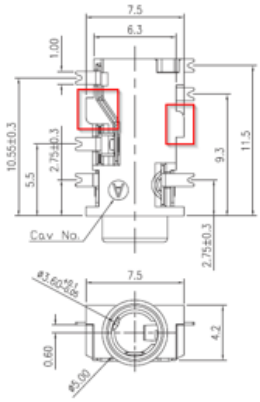

6405 SW Rosewood St, Ste C • Lake Oswego, OR 97035 • cuidevices.com • 877.323.3576

2. *Minor PCB Differences*

PREVIOUS CUI DEVICES DETAIL / IMAGE	NEW CUI DEVICES DETAIL / IMAGE
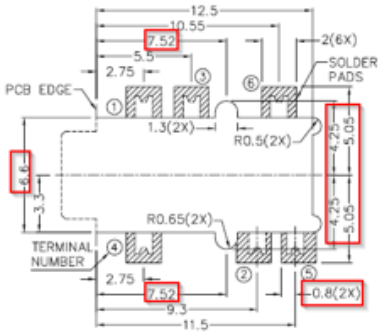	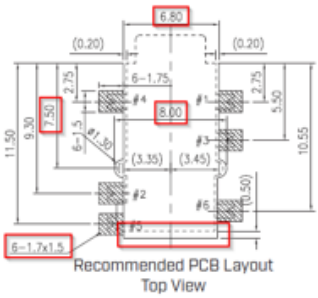

3. *Housing and Terminal material Differs*

PREVIOUS CUI DEVICES DETAIL / IMAGE	NEW CUI DEVICES DETAIL / IMAGE

	MATERIAL	PLATING
terminal 1	copper alloy	gold flash
terminal 2	copper alloy	gold flash
terminal 3	copper alloy	gold flash
terminal 4	copper alloy	gold flash
terminal 5	copper alloy	gold flash
terminal 6	copper alloy	gold flash
plastic	PA6T or equivalent	

DESCRIPTION	MATERIAL	PLATING/COLOR
terminal 1	C5210 t=0.20	gold flash over nickel
terminal 2	C5210 t=0.20	gold flash over nickel
terminal 3	C5210 t=0.20	gold flash over nickel
terminal 4	C5210 t=0.20	gold flash over nickel
terminal 5	C2680-EH t=0.20	gold flash over nickel
terminal 6	C2680-EH t=0.20	gold flash over nickel
housing	PA9T (UL94V-0)	black

4. Reel Packaging Change

PREVIOUS CUI DEVICES DETAIL / IMAGE	NEW CUI DEVICES DETAIL / IMAGE
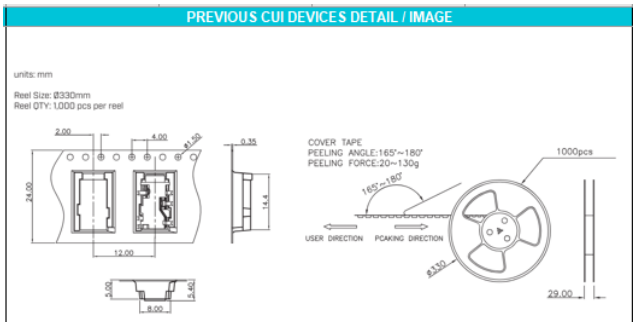	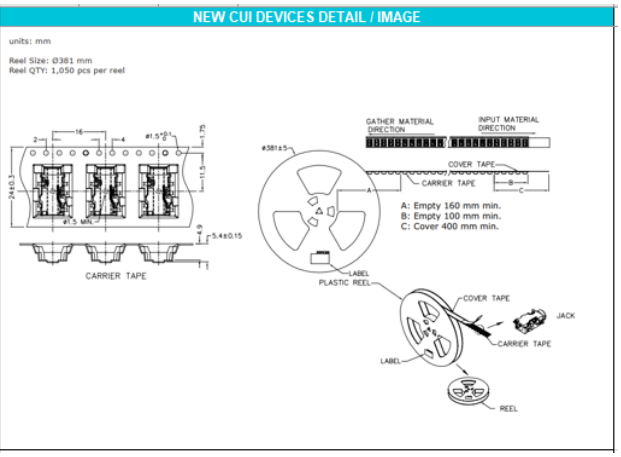

6405 SW Rosewood St, Ste C • Lake Oswego, OR 97035 • cuidevices.com • 877.323.3576

Affected Date Code: *11/15/2022*

Product Availability: *Channel availability mid Q4*

Additional Information:

PCN Approval:

Operations/Quality

Product Management

Nick Wolfe 11/15/2022

6405 SW Rosewood St, Ste C • Lake Oswego, OR 97035 • cuidevices.com • 877.323.3576